Solar Generation Data Acquisition System for Photovoltaic Applications in BAPV

[1]Josué Marcos de Moura Cardoso; [1]Lia Toledo Moreira Mota, [2]Hermes José Loschi, [2]Gabriel Gomes de Oliveira, [1]Valéria Cristina and [2]Yuzo Iano

[1] Pontifical Catholic University of Campinas, São Paulo, Brazil
josue18c@gmail.com
[2]State University of Campinas, São Paulo, Brazil

Abstract. The photovoltaic modules have its operation affected by various factors that may include, since the equipment technical characteristics of solar photovoltaic generation, climatic and/or environmental conditions, to the surface type in which they are applied. Test conditions adopted in national and international standards require 25° C as the maximum temperature value so that there is no damage to the photovoltaic conversion process. Dealing with applications of PV modules, the Building Applied Photovoltaic system (BAPV) exemplifies a case of photovoltaic conversion solutions association to buildings, however, through thermal conduction phenomena, the constructive elements of the building, when inserted into a BAPV context can cause excessive heating of the PV module, and vice-versa. This heat exchange relationship inherent on the BAPV concept is the goal of this paper. Through a wireless sensor network it was possible to perform the monitoring of physical (temperature) and electrical (voltage and current) parameters, with the combination of a microcontroller connected to a database. The test results show the relationship between the constructive typology surface temperature and data from the photovoltaic solar generation.

Keywords: photovoltaic modules; Building Applied Photovoltaic; surface temperature; energy efficiency; urban infrastructure systems.

1 Introduction

To meet the growing energy demand many countries diversify their energy matrix with the inclusion of renewable sources for energy production. Some technologies enable the abstraction of energy through various tools, promoting the mini/micro generation in urban areas, for example. In this scenario, photovoltaic (PV) systems emerge as a viable and promising tool for the production of electricity [1-7].

The technology and chemicals improvements adopted for the preparation of PV cells resulted in more flexible devices, and visually pleasing. As a result, the application of PV modules has spread more positively in areas such as construction. Building Applied Photovoltaic (BAPV) is the term adopted to conceptualize the buildings that have PV modules applied in their infrastructure. Other aspects are also considered in this architectural model for buildings, such as aesthetics and harmonization of PV modules as a part of the constructive environment [8-11].

However, there is a major problem when considering photovoltaic solar generation in a BAPV concept: energy efficiency depends on the environment temperature. As determined by the American Society for Testing and Materials, ASTM E-1036 and by International Electrotechnical Commission, IEC 1215, the Standard Test Conditions (STC) of PV modules should consider 1000 W/m² of global solar irradiance and 25° C of temperature [12-14]. In Brazil, NBR11876/EB2176 and NBR12137/MB378 standards also adopt the same values [6], [15-17]. Moreover, these standards consider testing carried out in the laboratory, in other words, the real conditions which the PV modules are subjected (abrupt variation of global solar irradiance and temperature) are do not include the assumptions used in this tests. Additionally, we must consider that the PV modules electrical characteristics are affected by the variability of global solar irradiance, ambient temperature and by the requirements of the equipment associated with photovoltaic solar generation [18-21].

The insertion of the PV modules in buildings creates the need to understand the relationship with the building elements, especially regarding the heat exchange conduction between the surfaces. In this context, the sensors networks are advantageous in providing facilities to carry out readings of parameters such as surface temperature and the electrical parameters of the PV module. Based on this principle, this paper aims to develop a solar generation data acquisition system for photovoltaic applications in BAPV.

2 Background knowledge

Classified into generations, the PV cells are now divided into four groups [14], [17], [22-24]:

- The first PV cell generation synthesizes the PV element constituted by crystalline silicon (monocrystalline - mc-Si or polycrystalline - pc-Si) as a semiconductor material. Mature technologies, but cost and efficiency improvements are difficult to achieve due to the silicon inherent limitations;
- The second PV cell generation are the thin films of amorphous silicon (a-Si), it is still limited by the same restrictions as silicon material. Copper indium gallium and selenium (CIGS) and cadmium telluride (CdTe), more efficiently than silicon, however, are rare and toxic materials;
- The third PV cell generation brings a) Organic Photovoltaic (OPV) which has low efficiencies even in the laboratory and has few mass production solution; b) Dye Sensitized Solar Cell (DSSC) has 12% efficiency already achieved, yet without mass producing solution;
- The fourth PV cell generation introduces the concept of Multiple Exciton Generation (MEG), which makes it possible to overcome the Shockley-Queisser limit by tandem structures (> 1 junction).

The temperature influence on the PV technology is discussed in different papers, and the relation of this parameter with the electrical efficiency is addressed as focus on

many of them. Each degree Celsius to plus 25° C determined by STC (Standard Condition Tests), in some studies presents a reduction of 0.5% of the power provided by the PV module [19], [23], [25-27].

A PV cell of a PV module has, throughout its area, similar chemical and physical characteristics. Soon we can consider that they absorb heat at the same rate. Thus, the temperature in a marked point on a PV cell of a PV module can be extrapolated to the entire PV module, if there are not different materials in the composition/integration of the PV modules and the absence of warming phenomena "Hot- Point" [21]. In this scenario, we can try to quantify the three heat transfer phenomena that influence the PV module temperature, as follows: convection, conduction and radiation.

The convection phenomenon is caused by local environmental conditions such as air temperature and air mass. The wind tends to cool the PV modules. This cooling effect is mainly caused by the PV systems installations (free standing, attached to the flat roof or an inclined position, on the facades of buildings). The conduction phenomenon is characterized by the PV module layers components and expressing heat transfer between these components (cells, sealing layer, glass, Tedlar). The radiation phenomenon is the main contributor to the temperature variation in PV modules. The operating temperature of the PV module, for example, increase 4.4° C when global solar irradiance increases from 800 W/m² to 900 W/m²; amounts to 1° C when the air temperature increases 1° C.

The author [31] presents a study with integration concepts of PV modules and buildings. The author highlights that the PV module temperature affects directly the energy efficiency of PV system. The author also presents a method for calculating the PV cell temperature considering environmental characteristics such as temperature and global solar irradiance. The author concludes that the way of PV systems are applied to the building infrastructure directly affects the operating temperature.

Figure 1 illustrates the heat exchange relation derived from BAPV concept. Usually the PV modules are fixed on the buildings by means of a metallic infrastructure, previously built considering the best angle of global solar radiation incidence. These systems are customarily applied to roofs of buildings and constructions in general [32-33]. However, BAPV considers the PV module adhered to building components already prepared and ready. Therefore, the contact between PV module and constructive element it´s very close. In this association, both parties absorb heat coming from the climatic and environmental conditions of the site where they are applied.

Figure 2 illustrates the BAPV compositions. In the literature, some methodologies are adopted to check the behavior of temperature on the PV modules surface. In the case of measurements by collecting surface contact, this occurs with the attachment of a sensor on the equipment rear face to prevent the shading over PV cells [10], [35-36]. Another alternative are the thermographic machines that provide images for detecting a hundreds of thousands of temperature points on any surface. There are also approaches in the literature to know the surface temperature values with mathematical models. The methods indicated here were developed in studies and research with specific equipment, as well as considering the environmental and climatic properties of each elaborate test [13], [37].

.

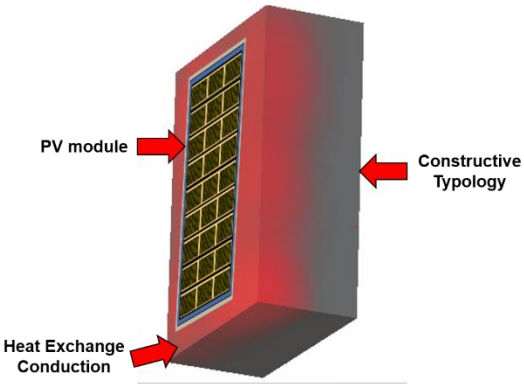

Fig. 1. Heat Transfer illustration by conduction between the elements associated with BAPV

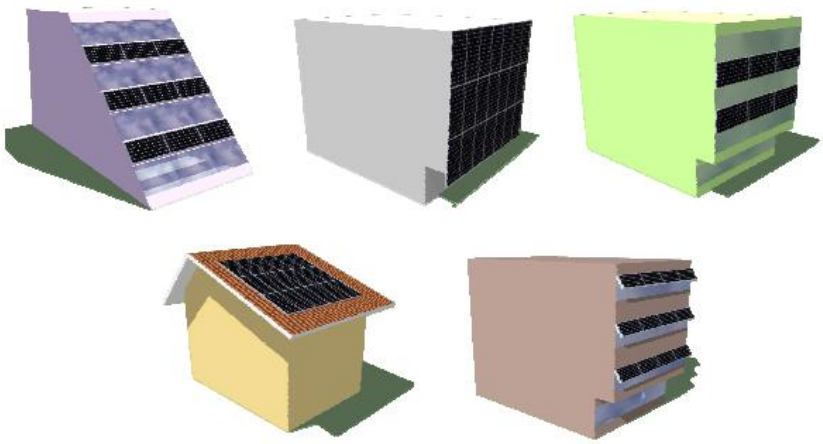

Fig. 2. BAPV System Settings [34]

With sensor networks, it is possible to perform a monitoring of the environmental and electrical parameters of PV modules. These networks allow the collection of data coming from the sensor nodes and transmitted to the base node for verification and analysis. [38] Several types of sensors are currently available and enable the production of monitoring networks. Nodes, base and sensors, have a converter unit (analog/digital) also adding the ease of obtaining both readings of the transducers with the use of a microcontroller.

3 Methodology

In order to collect the data to understand the BAPV system parameters were employed sensory elements with processing power and data transmission. Through the typical integrated circuit a data collection system has been designed, as illustrated in Figures 3 and 4.

The bench (Fig.3) is based on instrumentation sensing elements for the selected PV modules for testing. Two PV modules were associated with the experiments. The first is a PV module pc-Si [39], which is the best configuration for PV modules used in buildings and constructions in general. Also, in this work were adhered to an organic PV cell (Fig. 3) made by [40] manufacturer. Table (1) presents the technical characteristics.

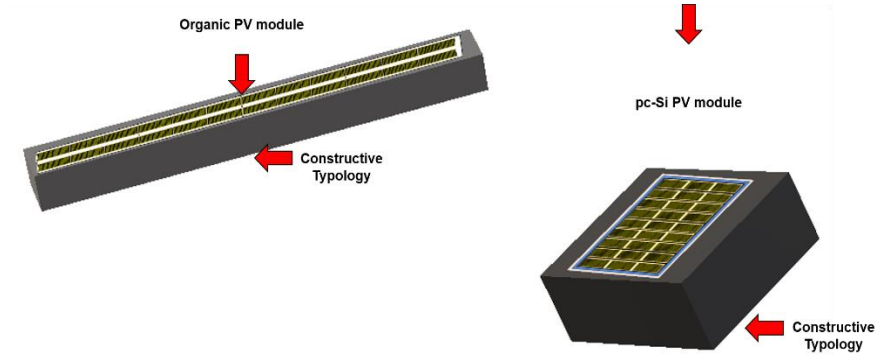

Fig. 3. Association of PV modules to building typology

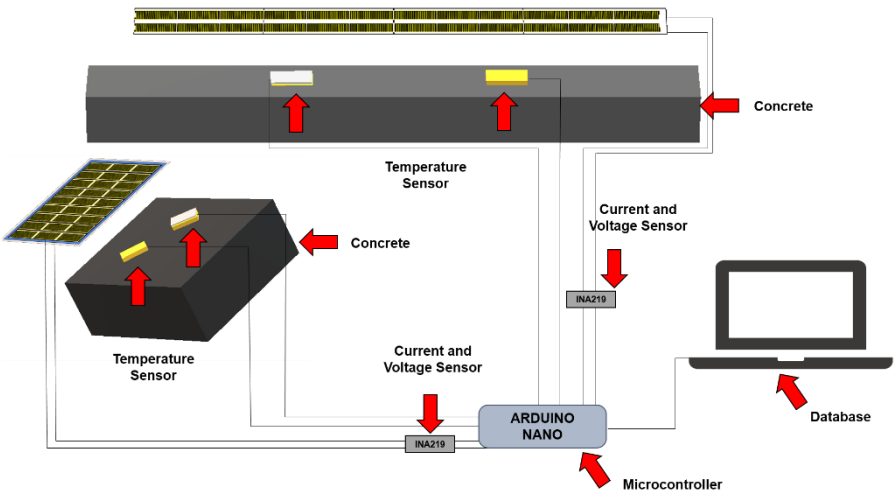

Fig. 4. Methodology associated with the test rig used for data collection

The construction element was designed with reinforced concrete trough specifications to simulate what would represent a building in BAPV system. The dimensions of each object are 30x30x9.5cm and 100x7.5x7.5cm. For data collection, it was designed essentially three parameters: surface temperature (° C) Voltage (V) and current (A).

The temperature sensors adopted was the CI MCP9700 [41]. To collect the voltage and current data is adopted the CI INA219 [42]. The junction of all the sensors was

performed using the microcontroller Arduino Nano [43], according to figure 4. Temperature sensors (MCP9700) were connected to analog inputs Arduino Nano (A0, A1, A2 and A3). Each sensor is connected INA219inputs A4 and A5 of the Arduino Nano. Figure 5 shows the arrangement of the devices in Arduino.

Table 1. PV modules technical characteristics.

Technology	Polycrystalline-Si	Organic cells
Dimensions	25,5x19,4cm	100x7cm
Tension open circuit (VCA)	22,41V	20V
Nominal voltage (V)	17,9V	~ 6V
Current open circuit (ICC)	0,33A	0.05 - 0,06A
Nominal current (I)	0,28A	0,05A
Number of Cells	72	20

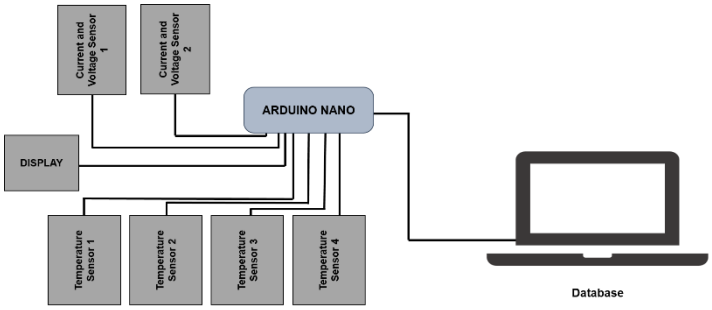

Fig. 5. Sensor network Set-up with the microcontroller and store the database

The I2C protocol conceives the realization of projects which are associated with peripheral microcontroller obeying master relationship and controlled (master-slave). The master coordinates communication between multiple slaves and the motherboard. The A4 input of the Arduino Nano is characterized by being a pin SDA (Serial Data); and the entry A5 is a SCL (Serial Clock). The SDA effectively transfers the data to the control unit, and the SCL serves for timing using an internal clock (clock). Figure 6 illustrated how the bus is connected, and where the sensors and the display INA219 were connected.

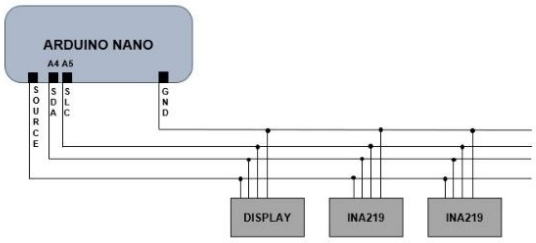

Fig. 6. Connections distributions of the devices to the SDA and SCL bus

To collect the temperature with the CI MCP9700 on the surface where it was adhered (PV module and constructive element) was applied the technique proposed by [37]. The sensor was placed between 4 layers of thermal insulating material (cork), so that the temperature collected by the CI MCP9700 did not suffer interference from the surrounding environment. Small holes were made in the layers of the package for insertion of the CI MCP9700. The dimensions of the surface temperature sensors are 5x7x3cm.

In addition to encapsulation process proposed in [37], the CI MPC9700 was sealed with heat shrink material to prevent contact with moisture and to isolate each terminal. A copper tape layer was also added to the prototype to sharpen the thermal conductivity of the face which was contained in the aluminum foil (heat conduction). Figure 7 shows how the prototypes of surface temperature sensors with their coating layers were prepared.

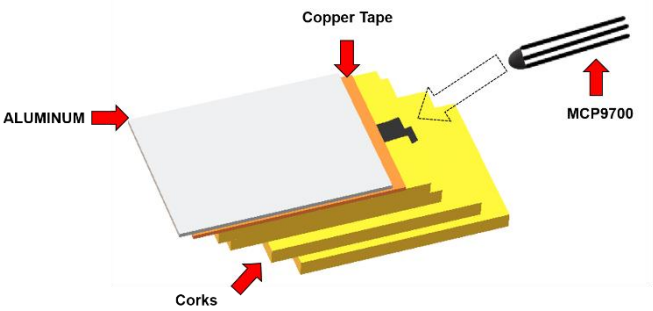

Fig. 7. MPC9700 coating process with their respective layers

Figure 8 shows the finished prototype with all coating layers of insulating material (cork) and thermally conductive aluminum and copper. Subsequently the encapsulated CI MCP9700 were introduced to the assembly by means of a hole made between the layers of cork.

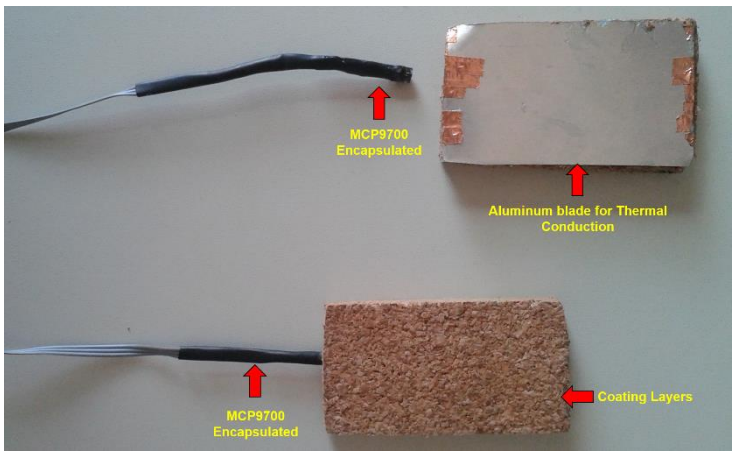

Fig. 8. Prototypes of surface temperature sensors with encapsulated MCP9700

Figure 9 illustrates how the surface temperature sensors to the proof body have been allocated. From the conductive heat transfer relationship in the system illustrated in Figure 1, each sensor has a thermal conductivity side (aluminum) positioned as follows: a) one of the prototypes had to facing the PV module; b) other sensor facing the constructive typology. This allocation is important to further identify the behavior of the thermal conductivity of different perspectives.

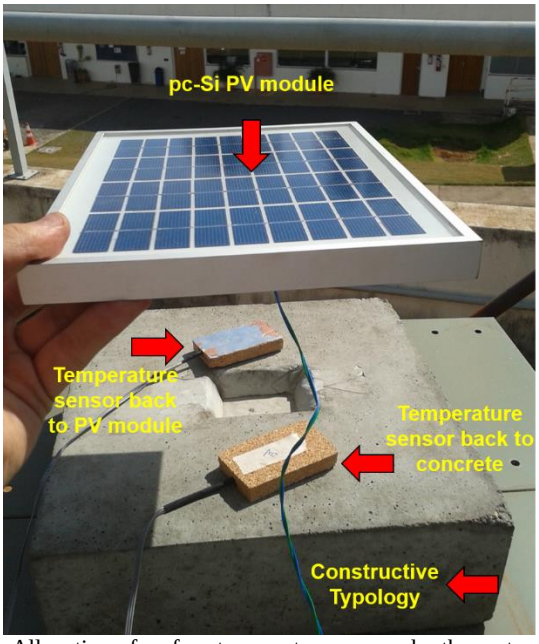

Fig. 9. Allocation of surface temperature sensors by the system BAPV

A resistive load is added to the circuit to excite the current flow formation. As a result, the Arduino Nano receives data relating to eight parameters programmed into the algorithm. They are: voltage (T1) and the current (C1), Temp0 and Temp1 originating from the PV module Polycrystalline-Si; voltage (T2) and the current (C2), Temp2 and Temp3 originating from the PV module containing organic cells.

This order is important because the algorithm was placed into a function where these parameters are sent in the form of string to the software installed on receptor database. Therefore, the supervisory associated with receiving database receives the data synchronously, enabling the visualization of the values collected by sensors in the form of graphs. Algorithm 1, calculates the eight parameters programmed.

Subsequently, the data is saved in the database through a monitoring software, the Arduino Nano is coupled by serial communication. The Telemetry Viewer [44] in synthesis, receives data from the microcontroller's serial port (COM "X"), and considers the string produced in the algorithm to allocate each variable in the form of graphs. Figure 10 shows the connections of all sensory elements with the Arduino Nano microcontroller. This element was connected to a laptop where the telemetry Viewer, enable the reading of the data in real time, generating a database at the end of each test

Algorithm 1 calculates the solar generation data acquisition system

```
Set the variables of process = T1, T2, C1, C2, Temp0, Temp1, Temp2, Temp3;
Set OLED = display(SDA, SCL);
Set serial communication = Serial.begin(38400);
Set sensor S1 = S1.begin(0x40);
Set sensor S2 = S2.begin(0x41);
Set AD conversion = analogReference(INTERNAL);
Calculate the data acquisition = millis (CODE INSIDE);
  for every in time (250 milli seconds/ ==0):
    T1 = S1.getBusVoltage_V();
    C1 = S1.getCurrent_mA();
    T2 = S1.getBusVoltage_V();
    C2 = S1.getCurrent_mA();
    Temp0 = (analogRead(0) * (REF/1023)) – 500,0;
    Temp1 = (analogRead(1) * (REF/1023)) – 500,0;
    Temp2 = (analogRead(2) * (REF/1023)) – 500,0;
    Temp0 = (analogRead(3) * (REF/1023)) – 500,0;
return display values = exibe_dsp();
return serial data = envia_dados();
```

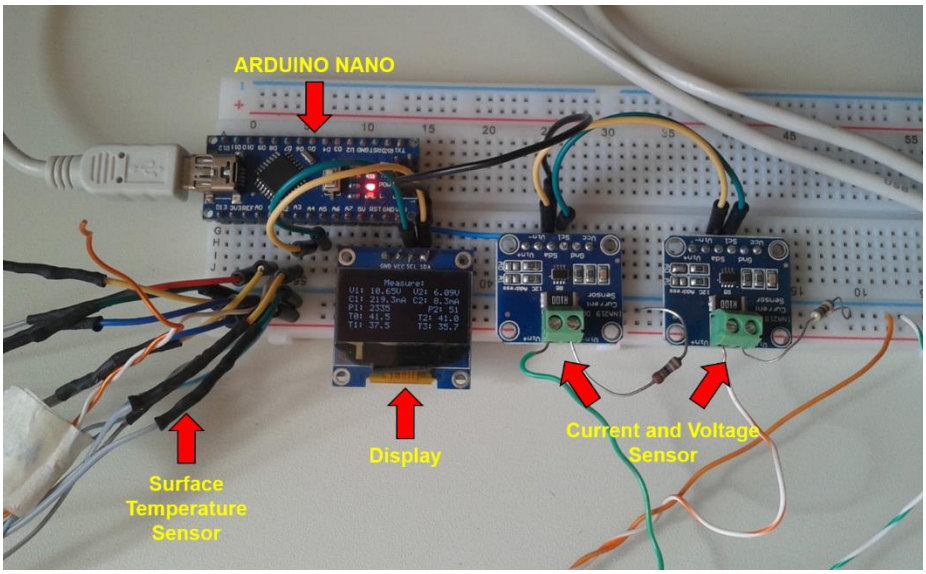

Fig. 10. Control and sensing system

Figure 11 shows the experimental bench made for implementation of the monitoring network with the sensors, building elements and PV modules.

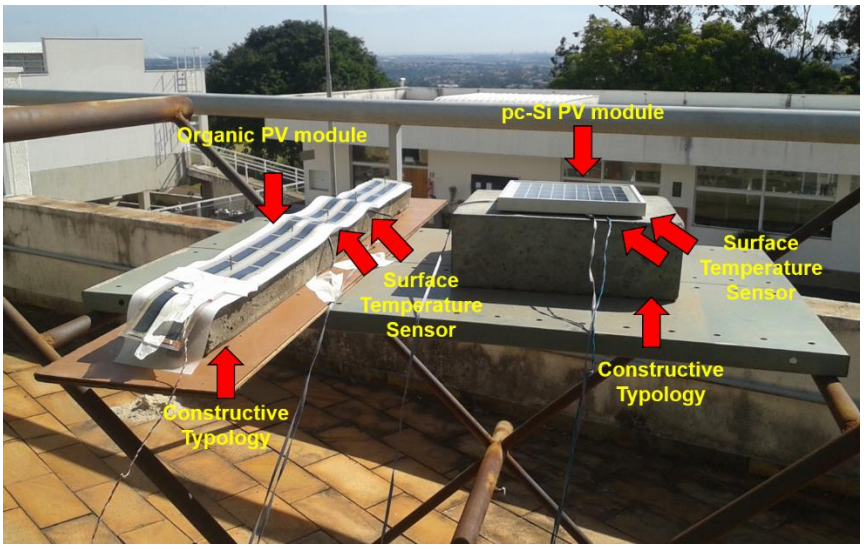

Fig. 11. Test bench containing the sensors and BAPV system.

4 Results

Data collection took place on the premises of the Catholic University of Campinas, Brazil. The surface temperature sensor probes have been validated with Testo manufacturer, provided by Laboratory of Thermal Comfort, Campinas PUC. The proof body was specifically prepared by the Soil Laboratory and Rocha from the same institution.

With the data collected by the sensors was possible to verify the effective performance of the elaborate network, and view real-time through an interactive interface, the graphs for each parameter collected by the monitoring network. Still, at the end of each experiment it is possible to generate an extension to file compatible with Excel, for example, for the application of data processing methods. Figure 12 shows the graphs generated by each sensor associated with the data acquisition system.

5 Conclusions

With the growth of PV modules in urban environments, specifically in buildings, new types of buildings arise adding energy efficiency in one of the sectors that most consume energy in the world. The BAPV brought the possibility of bringing together economic, social, environmental and political aspects in the concept applied to mini or micro power generation. Regarding the economy, new opportunities for market and new business models can be traced contemplating photovoltaic solar generation as input value added.

In the political sphere it is necessary that the laws to the issues inherent to buildings and urban environment contemplate this PV modules association, considering the different impacts that may arise for the user, or for the application environment. Therefore,

knowing the behavior of the materials involved in BAPV system can collaborate in developing more efficient and effective projects. Thus, the techniques and materials adopted in the building can be directed to boost energy efficiency, while still ensuring the best comfort of the occupants.

Using the data collected it can be seen that the actual working conditions of the PV modules, regarding the temperature parameter exceeds the numbers determined by ASTM E-1036, IEC 1215, NBR11876/EB2176 and NBR12137/MB378. For tests were found values around 32°C to 42°C for PV module with pc-Si. The organic components showed temperatures between 35°C to 45°C. Please note that the data collection occurred on days with favorable weather conditions "clear sky". Figure 13 shows that the BAPV system for both associations held response with the same trend of heat transfer. Such an event may be identified with the graphics that relate temperatures of PV modules and concrete proof body.

It is pointed out as possible implementations to the set up developed in future applications the use of ambient and airborne weather sensors such as relative humidity, temperature, wind speed and global solar irradiance.

Other approaches may be added with the use of thermography machines, e.g., for better understanding and visualization of the PV heat distribution modules, and may also promote further analysis regarding the temperature behavior at a BAPV system.

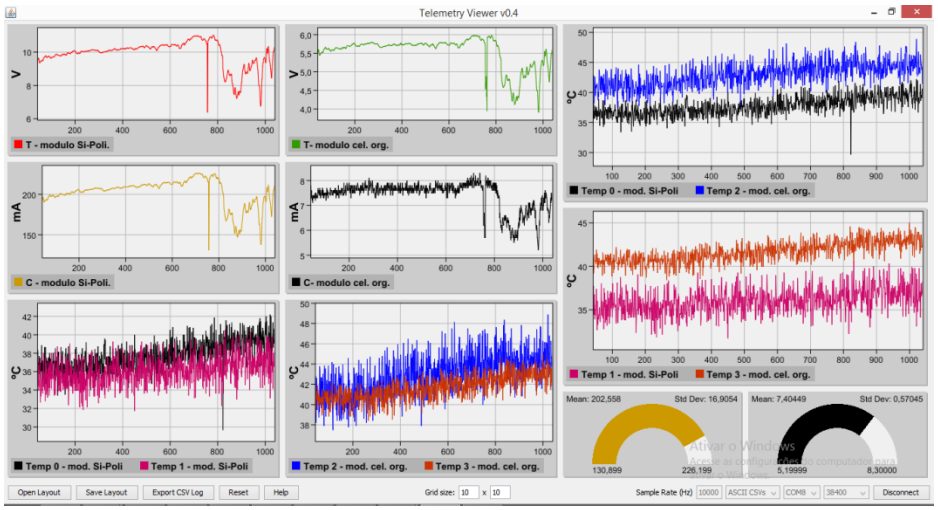

Fig. 12. Graphics generated by software Telemetry viewer illustrating each parameter derived from BAPV system.

6 Acknowledgment

The authors would like to thank the CAPES (Coordenação de Aperfeiçoamento de Pessoal de Nível Superior) for the scholarships that collaborated in the execution of this work, and at the Pontifical Catholic University of Campinas for granted infrastructure.

7 References

1. AGENCY OF NATIONAL ELECTRICAL ENERGY. Atlas Electric Power in Brazil. 1st edition. 2002. Available at: <http://www2.aneel.gov.br/arquivos/pdf/livro_atlas.pdf>. Access in Jan 09. 2018.
2. GOLDEMBERG, J.; LUCON, O. Renewable Energy: a sustainable future. USP Magazine, São Paulo, No 72, pp. 6-15, December/February, 2006/2007.
3. MODELING OF LABORATORY AND FEATURES OF RENEWABLE ENERGY RESEARCH; SYSTEM SCIENCE CENTER GROUND; NATIONAL INSTITUTE FOR SPACE RESEARCH. Atlas Brazilian Solar Energy. São José dos Campos, São Paulo. 2nd edition. Available at: <http://labren.ccst.inpe.br/atlas_2017.html>. Access on Jan 18. 2018.
4. MINISTRY OF MINES AND ENERGY, ENERGY COMPANY SEARCH. National Energy Balance (base year 2016). Available at: <https://ben.epe.gov.br/downloads/Relatorio_Final_BEN_2017.pdf>. Access on Jan 19. 2018.
5. MINISTRY OF MINES AND ENERGY, ENERGY COMPANY SEARCH. Statistical Yearbook of Energy 2017 (base year 2016). Available at: <http://www.epe.gov.br/sites-pt/publicacoes-dados-abertos/publicacoes/PublicacoesArquivos/publicacao-160/topico-168/Anuario2017vf.pdf>. 20 already access. 2018.
6. Prieb Caesar Wilhelm Massen. Development of a Photovoltaic Module Test System. 2002, 67 f. Master Thesis, Graduate Program in Mechanical Engineering, Federal University of Rio Grande do Sul. Porto Alegre, 2002.
7. Renewable Energy Policy Network for the 21st Century (REN21). Global Status Report. Paris, 2017. Available at: <http://www.ren21.net/wp-content/uploads/2017/06/17-8399_GSR_2017_Full_Report_0621_Opt.pdf>. Access on Jan 17. 2018.
8. Mousa, Hello BIPV/BAPV Barriers to Adoption:. Architect's Perspectives from Canada and the United States. 2014 156 f. Masters' Dissertation. University of Waterloo, Canada, in 2014.
9. OH, J.; TAMIZHMANI, GS; Palomino, E. Temperatures of Building Applied Photovoltaic Modules: Air Gap Effects. Reliability of Photovoltaic Cells, Modules, Components and Systems III, San Diego, CA, United States, V. 777 305, august 2010.
10. RÜTHER, R. Solar Photovoltaic Buildings: potential of integrated solar photovoltaic generation to the urban buildings and connected to the public grid in Brazil. 2004. 114 f. Florianópolis: Publisher UFSC/LABSOLAR 2004.
11. SCOGNAMIGLIO, A. 'Photovoltaic Landscapes': Design and Assessment. A CRITICAL Review for the New Transdisciplinary Design Vision. Renewable and Sustainable Energy Reviews - Elsevier, V. 55, 2016, pp. 629-661.
12. American Society for Testing and Materials, 1985 "and 1036 Standard Methods of Testing Electrical Performance of non-Concentrator Terrestrial Photovoltaic Modules and Arrays Using Reference Cells."
13. KRENZINGER, A.; LORENZO, E. Study of the Incident Radiation Photovoltaic panels bifacial in Geometry Function Reflectors Albedo. In: Proceedings of the II Iberian Conference of Solar Energy, Lisbon, Portugal, in 1984.
14. Santolin, Edson Antonio. Sensor Application to Optical Fiber on Thermal Monitoring Photovoltaic Panel. 2016 105 f. Master Thesis, Graduate Program in Electrical Engineering, Federal Technological University of Parana, Pato Branco, 2016.

15. Brazilian Association of Technical Standards. NBR12137/MB3478, 1991 Photovoltaic Modules - Mechanical Testing and Environmental. Available at: <http://www.abntcatalogo.com.br/norma.aspx?ID=5522>. Access on Feb 18. 2018.
16. Brazilian Association of Technical Standards. NBR11876/EB2176, 2010 Photovoltaic Modules. Available at: <http://www.abntcatalogo.com.br/norma.aspx?ID=58055>. Access on Feb 18. 2018.
17. Ortega, Lisbeth Lucia Martinez. Photovoltaic conversion: Performance Model Comparison. 2013 116 f. Masters Dissertation. Graduate Program in Metrology for Quality and Innovation, Pontifical University of Rio de Janeiro. Rio de Janeiro, in 2013.
18. ATMEL. ATmega48A/PA/88A/PA/168A/PA/328/P. Available at: <http://ww1.microchip.com/downloads/en/DeviceDoc/Atmel-8271-8-bit-AVR-Microcontroller-ATmega48A-48PA-88A-88PA-168A-168PA-328-328P_datasheet_Complete.pdf>. Access on 23 March 2018.
19. Center for Energy Research Reference Center for Solar and Wind Energy Sérgio de Salvo Brito, Ministry of Mines and Energy. Engineering Manual for Photovoltaic Systems. 2014. Available
20. Oliveira, Paulo Henrique Breyner Saldanha. NIPE Transformation Potential Assessment in a Zero Energy Efficiency. 2017, 95 f. Master's thesis, Faculty of Mechanical Engineering, State University of Campinas. Campinas, São Paulo, 2017.
21. Loschi, HJ (2017) "Proposal of the global solar irradiance prediction complementary method for short-term, based on Markov processes". Unicamp, Campinas, SP.
22. Falcon, Denise Vivienne. Manufacturing Solar Cells CdS/CdTe. 2005 120 f. Masters Dissertation. Master in Science of the Military Institute of Engineering Materials. Rio de Janeiro, 2005.
23. Luque, A.; HEGEDUS, S. Handbook of Photovoltaic Science and Engineering. 1st. ed. England, John Wiley & Sons Ltd, 2003.
24. MIR-ARTIGUES, P.; DEL RIO, P. The economics and Policy of Solar Photovoltaic Generation. 1st Green Energy and Technology, Springer, 2016.
25. FESHARAKI, VJ; Dehghani, M.; FESHARAKI, JJ The Effect of Temperature on Photovoltaic Cell Efficiency. In: International Conference on Emerging Trends in Energy Conservation - ETEC, Tehran, Iran, in 2011.
26. ROUHOLAMINIA, A.; POURGHARIBSHAHIA, H.; FADAEINEDJADA, R.; ABDOLZADE, M. Temperature of the Photovoltaic Module Under the influence of Different Environmental Conditions - Experimental Investigation. International Journal of Ambient Energy, V. 35, 2014, pp. 266-272.
27. Sahri, A.; Toumi, S.; RAMENAH, H.; TANOUGAST, C. Temperature Effects on the Power Production Based Photovoltaic Cell. In: International Conference on Microelectronics XXV (ICM), 2013, Beirut, Lebanon.
28. Denoix, T.; SECHILARIU, M.; LOCMENT, F. Experimental Comparison of Photovoltaic Cell Panel Temperature Operating Mode. In: XL Annual Conference of the IEEE Industrial Electronics, Dallas, Texas, United States, 2015.
29. TINA, G.; Bardhi, GGM Comparison of PV Cell Temperature Estimation by Different Thermal Power Exchange Calculation Methods. In: Proc. International Conference on Renewable Energies and Power Quality, Santiago de Compostela, Spain, in 2012.

30. TINA, G.; ABATE, R. Experimental Verification of Thermal Behavior of Photovoltaic Modules. In: Proc. 14th IEEE Mediterranean Electrotechnical Conference, Ajaccio, France, 2008, pp. 579-584
31. Davis, MW; FANNEY, AH; DOUGHERTY, BP Prediction of Building Integrated Photovoltaic Cell Temperatures. Journal of Solar Energy Engineering, V. 123, No 2 Special Issue, 2001, p. 200-210.
32. Ritzen, Michiel Joep. Environmental Impact Assessment of Building Integrated Photovoltaics - Numerical and Experimental Carrying Capacity Based Approach. 2017 217 f. Master's thesis, Eindhoven University of Technology, Eindhoven, Netherlands
33. Dubey, S.; SARVAIYA, JN; Seshadri, B. Temperature Dependent Photovoltaic (PV) Efficiency and Its Effect on PV Production in the World - A Review. Proceeding Energy, V. 33, 2013, pp. 311-321.
34. Zomer, Clarissa Debiazi. Partial shading influence Estimate Method in Energy Generation Integrated Photovoltaic solar systems in buildings. 2014 258 f. Doctoral thesis. Graduate Program in Civil Engineering. Federal University of Santa Catarina. Florianópolis, Santa Catarina, 2014.
35. Nordmann LCT; CLAVADETSCHER, L. Understanding Temperature Effects on PV System Performance. In: Proc. Third World Conference on Photovoltaic Energy Conversion, 2003, Osaka, Japan, pp. 2243-2246.
36. TRINURUK, P.; SORAPIPATANA, C.; CHENVIDHYA D. Estimating Cell Operating Temperature of BIPV Modules in Thailand. Renewable Energy, V. 34, Issue 11, pp. 2515 - 2523, 2009.
37. Silva, Bruno Alves of Phillip. Temperature Method for Determination of Photovoltaic panels by thermal quantitative. 2017, 60 f. Master Thesis, Graduate Program in Mechanical Engineering, Federal University of Minas Gerais. Belo Horizonte, 2017.
38. Oliveira, Everton Dias. Temperature monitoring in Buildings Using Wireless Networks. 2015, 85 f. Master's Thesis, Master's Program in Urban Infrastructure Systems, University of Campinas, Campinas, 2015.
39. Worthy Eco panel. Available at: <http://www.eco-worthy.com/catalog/worthy-polycrystalline-solar-panel-p-133.html>. Access 04 March 2018.
40. Infinity OPV. Solar bidirectional tape Tape 1m (> 3%). Available at: <https://infinitypv.com/shop/solar-cells/1m-bidirectional-solar-tape-3>. Access on 05 Mar. 2018.
41. microchip. MCP9700/9700A, MCP9701/9701A. Available at: <https://www.mouser.com/datasheet/2/268/20001942F-461622.pdf>. Access on Mar 10. 2018.
42. Texas Instruments.INA219 Zero-Drift, Bidirectional Current/Power Monitor with I2C Interface. Available at: <http://www.ti.com/lit/ds/symlink/ina219.pdf>. Visited on 28 March 2018.
43. Arduino Nano. Available at: <https://www.arduino.cc/en/uploads/Main/ArduinoNanoManual23.pdf>. Access on 12 March 2018.
44. Telemetry Viewer. Available at: <http://www.farrellf.com/projects/software/2017-02-11_Telemetry_Viewer_v0.3/>. Accessed on May 19, 2018.